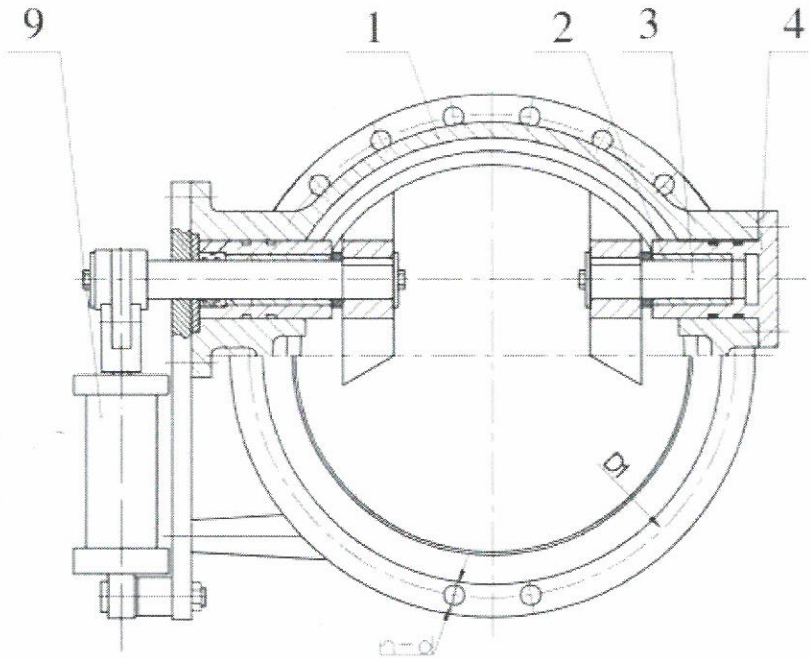

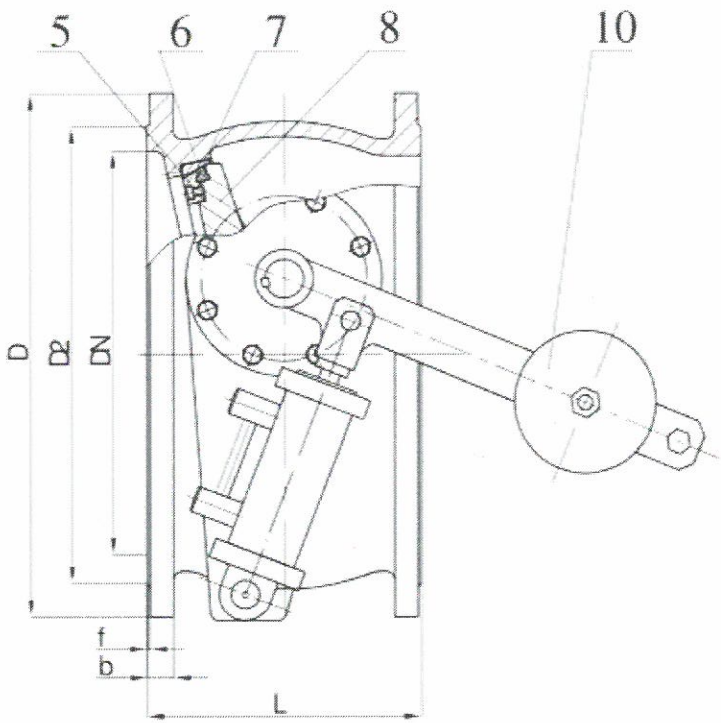

Specification :

Nominal pressure (MPa)		0.6
Testing pressure (MPa)	Body shell	0.9
	Seal	0.66
Working pressure (MPa)		0.6
Suitable temperature (°c)		≤ 80
Suitable medium		Water

Technical Requirement

1.Face to face standard:EN 558:2008 Series 14.
2.Flanges standard: BS EN1092-2:1997 PN6.
3.Tests standard: BSEN12266-1:2003 Part 1 Rate A .

500	0.6	350	Ø645	Ø600	Ø568	26.5	4	20-Ø23
DN (mm)	PN (Mpa)	L	D	D1	D2	b	f	n-d

No.	Name of part	Material	
10	Lever + Weight	Carbon Steel + Gray Iron	
9	Cylinder		
8	Disc	Ductile Iron	GGG50
7	Body sealing ring	Stainless Steel	SS304
6	Disc sealing ring	EPDM	
5	Retainer ring	Ductile Iron	GGG50
4	Cover	Ductile Iron	GGG50
3	Shaft	Stainless Steel	SS420
2	Shaft bushes	Stainless Steel+PTFE	
1	Body	Ductile Iron	GGG50

DN500 PN6

Butterfly check valve

IPU international